A general DDE model for terrestrial arthropods: from theory to validation guidelines under controlled conditions

Rossini, L. ORCID: https://orcid.org/0000-0003-2558-7111, Sweidan, Z., Baser, N. ORCID: https://orcid.org/0000-0002-7695-2329, Corbetta, M., Caffi, T., Anfora, G. ORCID: https://orcid.org/0000-0003-2545-1409, Gualano, S., Rossi, V., Santoro, F. and Garone, E. (2026) A general DDE model for terrestrial arthropods: from theory to validation guidelines under controlled conditions. Ecological Modelling, 518. 111619. ISSN 0304-3800 doi: 10.1016/j.ecolmodel.2026.111619 Available at https://centaur.reading.ac.uk/130617/

Ecological Modelling 518 (2026) 111619

Contents lists available at ScienceDirect

Ecological Modelling

journal homepage: www.elsevier.com/locate/ecolmodel

A general DDE model for terrestrial arthropods: from theory to validation guidelines under controlled conditions

Luca Rossini [a,*], Zeinab Sweidan [b], Nuray Baser [c], Marta Corbetta [b], Tito Caffi [b], Gianfranco Anfora [d], Stefania Gualano [c], Vittorio Rossi [e], Franco Santoro [c], Emanuele Garone [f]

[a] School of Agriculture, Policy and Development, University of Reading, Reading, UK
[b] Department of Sustainable Crop Production, Facoltà di Scienze Agrarie, Alimentari e Ambientali, Università Cattolica del Sacro Cuore, Piacenza, Italy
[c] International Centre for Advanced Mediterranean Agronomic Studies (CIHEAM) of Bari, Valenzano, Italy
[d] Centre for Agriculture, Food, and Environment (C3A), University of Trento, Trento, Italy
[e] Research Centre on Plant Health Modelling, Università Cattolica del Sacro Cuore, Piacenza, Italy
[f] Service d'Automatique et d'Analyse des Systèmes, Université Libre de Bruxelles, Brussels, Belgium

ARTICLE INFO

Keywords:
Physiologically-based models
Cohort-based models
Compartmental models
Spotted wing drosophila
Life tables

ABSTRACT

Models play a fundamental role in planning strategies for ecosystem conservation or, in the case of agriculture and forestry, for pest management. For this reason, in recent years there is an increasing demand of more accurate and reliable models, possibly general enough to be adapted to m*ultiple species*, once their biology is known. Models are usually validated using field data, which are however affected by uncertainties and other problems of difficult identification, such as unexpected migrations, and which can undermine the reliability of the validation process. This study introduces a new general model which describes the biology of terrestrial arthropods based on delay differential equations. Together with the model, this paper also introduces a novel method to estimate its parameters, including the minimum development times, based on life tables data. This study also introduces a validation protocol based on growth chamber experiments at different temperatures and validated the proposed theory on the case of *Drosophila suzukii*. The results showed a very good agreement between the population estimated by the model and the actual populations measured in growth chambers at different temperatures (10,16, 28, 32 and 34 °C). The outcomes of this study remark the connection between life tables experiments and modelling process for terrestrial arthropods and provide a general theory and application protocol that can be further applied to other species.

1. Introduction

The development of mathematical models describing bioecological phenomena has grown exponentially in the last few years (Divya and Kavitha, 2020; Rossini et al., 2020b). The main reason behind this increasing interest is the wide usage of models to cope with different goals, which range from a pure understanding of the natural processes to prediction and decision-making (Knight and Mumford, 1994; Zhai et al., 2020). An example at hand is plant protection in precision farming, where models play a fundamental role for planning management strategies and to estimate the effect of the control actions on the different organisms living in the agroecosystems (Sadovski, 2020).

The need for models which are specific for insect pests and plant diseases led the scientific community to explore and test different set of equations and methods, with the aim of obtaining a general framework that can be easily particularised to many different case studies (Buffoni and Pasquali, 2007; Diekmann et al., 2020; Rossini and Bruzzone, 2025; Rossini et al., 2019a; Rossini et al., 2021a,b). So far, many models have been introduced and validated in the case of insect pests and terrestrial arthropods at large, complemented with specific pipelines for their parameterisation and validation (Gilioli and Pasquali, 2007; Pasquali et al., 2019; Rossini et al., 2022b, 2023). Bioecological systems, however, are naturally characterised by delays, as highlighted by many pioneering studies on modelling (Adler et al., 1989; Crauste et al., 2008; Manetsch, 1976; Neverova et al., 2016; Turchin, 1990; Vansickle, 1977; Williams and Liebhold, 1995). In the case of terrestrial arthropods, for instance, the stage-development and fertility are not *instantaneous*, even under optimal developmental conditions. Experiments conducted under

* Corresponding author.
E-mail address: l.rossini@reading.ac.uk (L. Rossini).

https://doi.org/10.1016/j.ecolmodel.2026.111619
Received 19 December 2025; Received in revised form 30 March 2026; Accepted 20 April 2026
Available online 30 April 2026

controlled conditions showed that there is a *minimum time* that should be *waited* before observing at least one individual that develop to the next stage (Chi, 1988; Chi et al., 2023; Rossini et al., 2025c, 2024). This observation led to the inclusion of stage-delays in physiologically-based models, representing a great step towards more reliable mathematical description of the biology of terrestrial arthropods. Over the years, the description of delayed phenomena in population dynamics has been carried out using different family of equations, ranging from matrix or discrete models (Neverova et al., 2016; Sondgerath and Richter, 1990), distributed delay models (Adler et al., 1989; Chen et al., 2025; Severini et al., 2003, 1990), partial differential equations (Al-Omari and Gourley, 2005; Zhang and Xiao, 2016; Zhang and Zhao, 2013), to delay differential equations (Banks et al., 2017; Corbetta et al., 2026; Huang et al., 2020).

The physiologically-based model introduced by Rossini et al. (2022a), (2021a) and further improved in subsequent studies (Rossini et al., 2025a) is one of the most recent examples of model development the literature provides. Notably, this model was initially formulated by using Ordinary Differential Equations (ODEs), however, recent improvements based the description of the number of individuals over time within the different life stages through a series of chained Delay Differential Equations (DDEs). To date, the model has been tested with different case studies and can also be combined with state-observers (e.g., the Extended Kalman Filter), i.e., algorithms which correct the model estimation based on the abundance of the population measured in the field (Bono Rossello et al., 2022; Bono Rosselló et al., 2023; Rossini et al., 2026).

Most of the models presented over the years for terrestrial arthropods have been validated using field data only, raising the questions of how reliable a validation with field data is (Rossini et al., 2025b). Field data in agroecology and ecology at large are noisy and affected by uncontrolled effects (Johnson, 1950; Onufrieva and Onufriev, 2021; Rossini et al., 2025b), such as migrations and other interactions (e.g., unaccounted natural enemies and environmental factors, plant defence mechanisms) not included into the models. In other words, model validations assume that the field of interest is a *closed system* or, more correctly, is a system in *equilibrium* with the surrounding environment. In terms of population dynamics, we might assume that for each individual leaving, there is one individual coming from the neighbouring fields. Other possible issues, as recently pointed out in Rossini et al. (2025b), are related to the specific measurement technique applied to assess the population dynamics and to the unknown relationship between the individuals counted and the actual population within the field. Those factors, together with the estimation of the initial conditions to run simulations (Benhamouche et al., 2025; Bono Rossello et al., 2022; Bono Rosselló et al., 2023), pose several questions about the scientific reliability of the validation process.

For this purpose, experiments carried out in laboratory or semi-controlled environments (e.g., greenhouses) can be a valuable alternative that can improve the *good modelling practices* (Jakeman et al., 2024), substantially contributing to establish standard and reliable model development and validation protocols. Most of the surrounding noise typical of open field environments can be reduced and the infestations can be established artificially, providing an exact knowledge of the initial conditions to assign to the model (Caswell, 2010). Datasets collected in growth chambers are usually involved in the model parameters' estimation process (Rossini et al., 2019b, 2020c), as they serve as basis to define the development, mortality, fertility, and predation/parasitisation rates, to cite some examples (Rossini et al., 2024). These experiments are known as *life tables* and consist of rearing cohort of eggs laid on a short time interval under constant environmental conditions (Chi, 1988; Chi et al., 2023, 2020; Chi and Liu, 1985; Rossini et al., 2025c).

Life tables are widely used to explore the biology and the response of populations of arthropods to external factors (e.g., temperature, relative humidity, photoperiod, diet) and over the years the scientific community proposed some standards for data collection and sharing (Chi et al., 2023; Rossini et al., 2025c). Since life tables are already part of the modelling process, it is reasonable to use this kind of experiment for validation purposes as well, prior to moving to open field environments. A thorough validation under controlled conditions, in fact, allows modellers to include only the factors which are effectively accounted by the model, excluding any source of external noise which might generate doubts on the reliability (Caswell, 2010). Moreover, this intermediate step can be helpful to understand which are the additional factors that should be included into the model in case the field validation fails.

This study aims to introduce an improved version of the DDE model of Rossini et al. (2025a) and to show the validation process under controlled conditions in the case of the spotted-wing drosophila, *Drosophila suzukii* Matsumura (Diptera: Drosophilidae). In what follows, we are going to complement the theoretical, methodological, and experimental aspects related to the DDE model, providing a set of guidelines that might be further extended to other modelling frameworks, as well. More specifically, this study aims to: *i)* revise the DDE model to better describe insects' stage-development, *ii)* introduce a new methodology to estimate the *minimum development time*, namely the time-dependent delay contained into the DDEs, from life tables raw data, and *iii)* validate the DDE model stage-by-stage by using datasets collected *ad hoc* from life tables experiments.

2. Material and methods

2.1. General physiologically-based model

To achieve the objectives of this study, let us focus on the physiologically-based model in Rossini et al. (2025a). In what follows, we recall the general traits of the model while introducing its complete form, which takes into account the conservation of the number of individuals in all the stages at each time step t. From a biological point of view, an individual can develop to the next life stage after a series of chained biochemical reactions is successfully completed (Chou and Greenman, 2016; Greenman and Chou, 2016; Sharpe and DeMichele, 1977). This intuition led to the introduction of the *minimum development time*, namely the minimum time that should be respected before observing (even in the optimal developmental conditions) a stage transition. From a mathematical point of view, the minimum development time corresponds to the delay $\tau_i(t)$ included into the DDEs, a parameter that generally depends on the environmental conditions.

This study, however, would like to extend the above-mentioned physiologically-based DDE model by further characterising the state of the individuals during the minimum development time phase, providing a more reliable description of the biological mechanisms behind terrestrial arthropods. The DDE model of (Rossini et al., 2025a), in fact, works very well in case of species with fast/short life cycles, a condition that involves many cases of ecological and agronomical interest, but that at the same time constraints its generality. This precondition led us to revise the DDE model by revising the usual association between *life stage* and *state*, so far considered 1:1. The presence of the delays, in fact, leads to divide the development in each life stage in two phases (states): the *transient phase*, when the individuals are *waiting* the corresponding $\tau_i(t)$ time before starting their development phase to the next life stage, and the *development phase*, when the individuals actually start their development towards the next life stage. In mathematical terms, each life stage i has two associated states, $x_i(t)$ and $x_i^{tr}(t)$, described by two specific DDEs. From an experimental point of view, the identification of the individuals in the transient and development phases is difficult, for this reason the overall population associated with the life stages i is described by the sum of the two states $x_i(t) + x_i^{tr}(t)$.

The life stages i, instead, are defined according to the usual morphological description of the species carried out by the specialists: an example at hand could be the division in egg, larval instars, pupa, and

adults (non-mated females, mated females, and males), or in egg, nymphal stages and adults. Adult females are divided into two substages describing different mechanisms possible among terrestrial arthropods: they could represent the non-mated and mated females or different egg production rates (gonotrophic cycles) due to the age of the female (Ngwa et al., 2019; Otero et al., 2006), described by two specific egg production rates $\beta_1(t)$ and $\beta_2(t)$. In line of principle, reproduction can also be cyclic, even if this factor depends on the species, and mathematically described by specific rates $G_{1\to2}(t)$ and $G_{2\to1}(t)$, according to the initial formulation presented in Rossini et al., (2025a), (2022a), (2021a). It is worth pointing out that the first female substage is an intermediate stage, thus, it generally follows the division in development and transient phase, as for the juvenile stages.

The DDE model describes the number of individuals which, over time, are in the different life stages, according to the scheme shown in Fig. 1. The incoming and outgoing fluxes of individuals are generally regulated by specific functions, defined as development $G_i(t)$ and mortality $M_i(t)$ rates, which connect the biological life cycle with the external environment and whose parameters uniquely identify the species. Combining the above-mentioned assumptions with the formulation described in Rossini et al. (2025a), (2022a), (2021a), the general DDE model assumes the following mathematical form:

$$\begin{aligned}
\frac{d}{dt}x_E(t) &= \beta_1(t)G_{A_{F1}}(t)\exp\left[-M_{A_{F1}}(t)\ \tau^{ovi}_{A_{F1}}\right]x_{A_{F1}}\left(t-\tau^{ovi}_{A_{F1}}\right)\\
&\quad+\beta_2(t)G_{A_{F2}}(t)\exp\left[-M_{A_{F2}}(t)\ \tau^{ovi}_{A_{F2}}\right]x_{A_{F2}}\left(t-\tau^{ovi}_{A_{F2}}\right)-G_E(t)x_E(t)\\
&\quad-M_E(t)\ x_E(t)\\
\frac{d}{dt}x^{tr}_E(t) &= G_E(t)\ x_E(t)-\exp\left[-M^{tr}_E(t)\ \tau_E\right]\ G^{tr}_E(t)\ x^{tr}_E(t-\tau_E)-\ M^{tr}_E(t)x^{tr}_E(t)\\
\frac{d}{dt}x_{L1}(t) &= \exp\left[-M^{tr}_E(t)\ \tau_E\right]\ G^{tr}_E(t)\ x^{tr}_E(t-\tau_E)\ -G_{L1}(t)\ x_{L1}(t)\\
&\quad-M_{L1}(t)x_{L1}(t)\\
\frac{d}{dt}x^{tr}_{L1}(t) &= G_{L1}(t)\ x_{L1}(t)-\exp\left[-M_{L1}(t)\ \tau_{L1}\right]\ G^{tr}_{L1}(t)\ x^{tr}_{L1}(t-\tau_{L1})\\
&\quad-\ M_{L1}(t)x^{tr}_{L1}(t)\\
\frac{d}{dt}x_{Ln}(t) &= \exp\left[-M^{tr}_{Ln-1}(t)\ \tau_{Ln-1}\right]\ G^{tr}_{Ln-1}(t)\ x^{tr}_{Ln-1}(t-\tau_{Ln-1})-G_{Ln}(t)\ x_{Ln}(t)\\
&\quad-M_{Ln}(t)\ x_{Ln}(t)\\
\frac{d}{dt}x^{tr}_{Ln}(t) &= G_{Ln}(t)\ x_{Ln}(t)-\exp\left[-M^{tr}_{Ln}(t)\ \tau_{Ln}\right]\ G^{tr}_{Ln}(t)\ x^{tr}_{Ln}(t-\tau_{Ln})\\
&\quad-\ M_{Ln}(t)x^{tr}_{Ln}(t)\\
\frac{d}{dt}x_{AM}(t) &= [1\ -\ S_R(t)]\exp\left[-M^{tr}_{Ln}(t)\ \tau_{Ln}\right]\ G^{tr}_{Ln}(t)\ x^{tr}_{Ln}(t-\tau_{Ln})\\
&\quad-M_{AM}(t)x_{AM}(t)\\
\frac{d}{dt}x_{A_{F1}}(t) &= S_R\exp\left[-M^{tr}_{Ln}(t)\ \tau_{Ln}\right]\ G^{tr}_{Ln}(t)\ x^{tr}_{Ln}(t-\tau_{Ln})-\ M_{A_{F1}}(t)x_{A_{F1}}(t)\\
&\quad-G_{1\to2}(t)x_{A_{F1}}(t)+\exp[-M_{A_{F2}}(t)\ \tau_{A_{F2}}]G_{2\to1}(t)x_{A_{F2}}(t-\tau_{A_{F2}})\\
\frac{d}{dt}x^{tr}_{A_{F1}}(t) &= G_{1\to2}(t)x_{A_{F1}}(t)-\exp\left[-M^{tr}_{A_{F1}}(t)\ \tau_{A_{F1}}\right]G^{tr}_{1\to2}(t)x^{tr}_{A_{F1}}(t-\tau_{A_{F1}})\\
&\quad-\ M^{tr}_{A_{F1}}(t)x^{tr}_{AF1}(t)\\
\frac{d}{dt}x_{A_{F2}}(t) &= \exp\left[-M^{tr}_{A_{F1}}(t)\ \tau_{A_{F1}}\right]G^{tr}_{1\to2}(t)x^{tr}_{A_{F1}}(t-\tau_{A_{F1}})-M_{A_{F2}}(t)x_{A_{F2}}(t)\\
&\quad-G_{2\to1}(t)x_{A_{F2}}(t)
\end{aligned}\tag{1}$$

where the dependence of the minimum development times on time, $\tau_i(t)$, has been omitted for the sake of notation readability. The subscript ^{tr} denotes the transient states and their associated development and mortality rates. The general exponential terms $\exp\left[-M^{tr}_i(t)\ \tau_i\right]$, instead, take into account the probability that an individual dies during the transition phase (Lou et al., 2019), and contributes to the mass conservation of the overall system for each time t.

Relation with the previous models. The Eq. (1) extends the DDE model in (Rossini et al., 2025a) providing a more detailed description of the population in the preimaginal stages which ensures a stage-by-stage mass-conservation. With the model (1) we can correctly monitor all the stages at the same time, overcoming the limitation of its simplified form proposed in Rossini et al. (2025a). The simplified version of the model, in fact, is suitable for describing the stage-development of egg-to-adult populations but can be more troublesome to interpret when we would like to track all the intermediate development stages. Furthermore, it is worth noting that the DDE model in Rossini et al. (2025a) approximates the model (1) in case of small delays as common in certain species of arthropods. Note also that model (1) collapse to its ODE version (Rossini et al., 2022b, 2021a) when the delays are set to zero ($\tau_i(t)=0$), as in that case $x_i(t)=x^{tr}_i(t)$ and $M^{tr}_i(t)=0$.

The transient phase explained with an analogy. The reason behind the introduction of the transient phase can be explained with the following simple example. Let us assume to have two train stations, denoted with A and B. The two stations are connected by a train with traveling duration

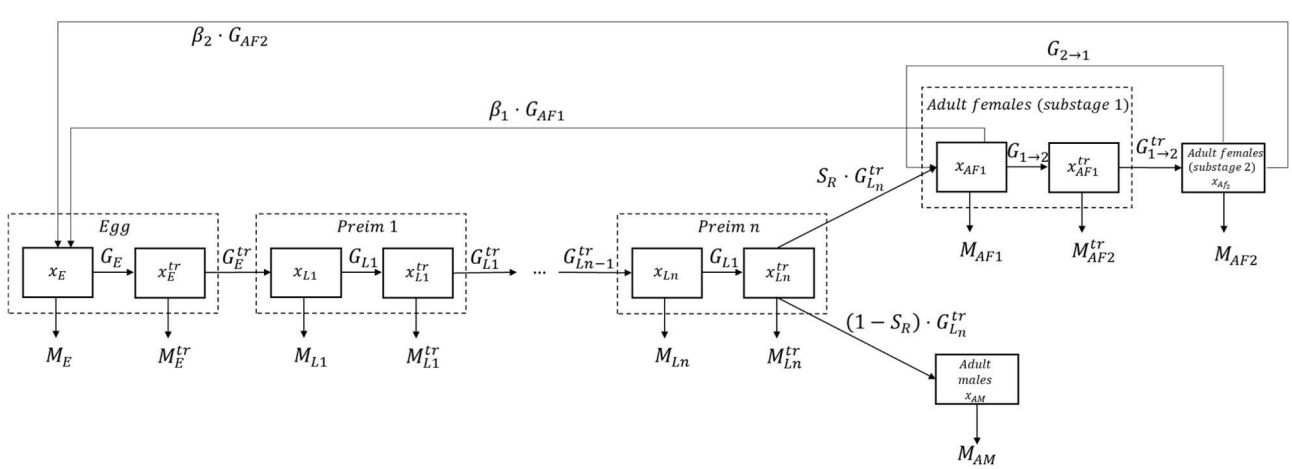

Fig. 1. Schematic representation of the life cycle associated with the general model (1). *Preim* stands for "preimaginal stage", x_i and x^{tr}_i denote the development and the transient stages, respectively, M_i indicates mortalities, G_i transition rates, and β_i the reproduction rates.

τ. When the passengers from the station A step on the train, they are not physically present anymore within the station A and cannot be counted in the station A anymore. At the same time, the passengers on the train are not present in the station B neither, during the overall duration of the travel, τ. When the train reaches the station B, after a time $t = \tau$, the passengers are physically present in the station B. Accordingly, at each time step the overall number of the passengers is represented by the number of individuals on the station A and B, and on the train. The same concept applies to the life cycle of terrestrial arthropods, where the *stations* are the development compartments and the *train* the transient compartments. The difference becomes higher as the duration of the train ride τ is longer, justifying the approximation of the model (1) with the simplified version in Rossini et al. (2025a) in case of short minimum development times. If the duration of the train ride is zero, the passengers reach the station B instantaneously, which from a mathematical point of view corresponds to the special case of ODEs (Rossini et al., 2022a, 2021a).

2.2. The case study of drosophila suzukii

After presenting the general theory, let us introduce an operating protocol of model application by considering a case study of agronomic interest. As for its precursors, in fact, the model (1) assumes biological meaning only when a specific case study is defined, because the exact number of equations and the rates involved is defined by the number of stages composing the life cycle and by the mechanism of reproduction. Moreover, the rate functions corresponding to mechanisms which are not representative for the species can be set to zero (Rossini et al., 2021a), so as to remove the corresponding term from the equations.

For this purpose, we consider the case of the spotted wing drosophila, *Drosophila suzukii*, an injurious pest for soft fruit cultivations worldwide (Rossini et al., 2020a; Walsh et al., 2011). Native to Asia, this insect pest has been accidentally introduced and became invasive in many countries worldwide (Calabria et al., 2012; Cini et al., 2012; Grassi et al., 2011; Hauser, 2011), so that the literature is reach of quantitative information (Dalton et al., 2011; Kinjo et al., 2014; Ryan et al., 2016; Tochen et al., 2014; Wiman et al., 2014, 2014; Winkler et al., 2021) and datasets supporting the development and parameterisation of the model (1) are publicly available (Baser et al., 2025b). This precondition makes *D. suzukii* the optimal candidate to achieve the goals of the present study, although it is worth remarking that the protocols applied hereafter can be adapted to any other terrestrial arthropods.

The life cycle of this species is composed of an egg stage E, three larval stages L_1, L_2, and L_3, a pupa stage P, males A_m, non-mated females A_{nmf}, and mated females A_{mf}. According to the definition of the model (1), all the life stages are described by a development and transient state, except for adult males and mated females, as there is no further development after those two life stages, and non-mated females. The overall population is hereafter described by the following state vector:

$$x(t) = \left(x_E(t),\ x_E^{tr}(t),\ x_{L_1}(t),\ x_{L_1}^{tr}(t),\ x_{L_2}(t),\ x_{L_2}^{tr}(t),\ x_{L_3}(t),\ x_{L_3}^{tr}(t),\ x_P(t),\ x_P^{tr}(t),\ x_{Am}(t),\ x_{A_{nmf}}(t),\ x_{A_{mf}}(t)\right)^T \tag{2}$$

where the superscript ^{tr} denotes the transient states and T the transposition operation. The division of the female substages in non-mated and mated implies that $\beta_2(t) = 0$; moreover, there is no cyclic reproduction (Emiljanowicz et al., 2014; Kinjo et al., 2014), meaning that $G_{2\to1}(t) = 0$. The transition from non-mated to mated females, instead, can be set to $G_{1\to2}(t) = 1 - M_{A_{nmf}}(t)$, according to the information available in the current literature and as already assumed in (Rossini et al., 2021a). This assumption leads to cancel out the equation of the transient state in the non-mated females substage, leading to a mathematical simplification of the model. The above-mentioned biological hypotheses, complemented with a constant sex ratio $S_R = 0.5$ (Baser et al., 2025b; Emiljanowicz et al., 2014), finally provide the following DDE model:

$$\begin{aligned}
\frac{d}{dt}x_E(t) &= \beta_1(t)\exp\left[-M_{Amf}(t)\ \tau_{Amf}^{ovi}\right]G_{A_{mf}}(t)x_{Amf}(t) - G_E(t)x_E(t) \\
&\quad - M_{Egg}(t)\ x_{Egg}(t) \\
\frac{d}{dt}x_E^{tr}(t) &= G_E(t)\ x_E(t) - \exp[-M_E(t)\ \tau_E]\ G_E(t)\ x_E^{tr}(t-\tau_E) - M_E(t)x_E^{tr}(t) \\
\frac{d}{dt}x_{L1}(t) &= \exp[-M_E(t)\ \tau_E]\ G_E(t)x_E^{tr}(t-\tau_E) - G_{L1}(t)\ x_{L1}(t) - M_{L1}(t)x_{L1}(t) \\
\frac{d}{dt}x_{L1}^{tr}(t) &= G_{L1}(t)\ x_{L1}(t) - \exp[-M_{L1}(t)\ \tau_{L1}]\ G_{L1}(t)\ x_{L1}^{tr}(t-\tau_{L1}) \\
&\quad - M_{L1}(t)x_{L1}^{tr}(t) \\
\frac{d}{dt}x_{L2}(t) &= \exp[-M_{L1}(t)\ \tau_{L1}]\ G_{L1}(t)\ x_{L1}^{tr}(t-\tau_{L1}) - G_{L2}(t)\ x_{L2}(t) \\
&\quad - M_{L2}(t)\ x_{L2}(t) \\
\frac{d}{dt}x_{L2}^{tr}(t) &= G_{L2}(t)\ x_{L2}(t) - \exp[-M_{L2}(t)\ \tau_{L2}]\ G_{L2}(t)\ x_{L2}^{tr}(t-\tau_{L2}) \\
&\quad - M_{L2}(t)x_{L2}^{tr}(t) \\
\frac{d}{dt}x_{L3}(t) &= \exp[-M_{L2}(t)\ \tau_{L2}]\ G_{L2}(t)\ x_{L2}^{tr}(t-\tau_{L2}) - G_{L3}(t)x_{L3}(t) \\
&\quad - M_{L3}(t)x_{L3}(t) \\
\frac{d}{dt}x_{L3}^{tr}(t) &= G_{L3}(t)x_{L3}(t) - \exp[-M_{L3}(t)\ \tau_{L3}]\ G_{L3}(t)x_{L3}^{tr}(t-\tau_{L3}) \\
&\quad - M_{L3}(t)x_{L3}^{tr}(t) \\
\frac{d}{dt}x_P(t) &= \exp[-M_{L3}(t)\ \tau_{L3}]\ G_{L3}(t)\ x_{L3}^{tr}(t-\tau_{L3}) - G_P(t)x_P(t) - M_P(t)x_P(t) \\
\frac{d}{dt}x_P^{tr}(t) &= G_P(t)x_P(t) - \exp[-M_P(t)\ \tau_P]\ G_P(t)x_P^{tr}(t-\tau_P) - M_P(t)x_P^{tr}(t) \\
\frac{d}{dt}x_{AM}(t) &= [1 - S_R]\exp[-M_P(t)\ \tau_P]\ G_P(t)x_P^{tr}(t-\tau_P) - M_{AM}(t)x_{AM}(t) \\
\frac{d}{dt}x_{Anmf}(t) &= S_R\exp[-M_P(t)\ \tau_P]G_P(t)x_P^{tr}(t-\tau_P) - x_{Amf}(t) \\
\frac{d}{dt}x_{Amf}(t) &= x_{Anmf}(t) - M_{Anmf}(t)x_{Anmf}(t) - M_{Amf}(t)x_{Amf}(t)
\end{aligned} \tag{3}$$

The information available on this species, led us to consider $G_i(t) = G_i^{tr}(t)$ and $M_i(t) = M_i^{tr}(t)$ in all the equations of the model (3). Parameterisation, instead, is further detailed in the next sections: part of it has been based on some life tables studies (Baser et al., 2025b), while the estimation of the minimum development times was derived from raw datasets and is a concept introduced in this paper for the first time. It is worth pointing out that, for the sake of completeness, model (3) has been written in its complete form, which includes the fertility rate on the first equation, however, the validation dataset considered hereafter

accounts only for a single generation, meaning that $\beta_1(t) = 0$.

2.3. Temperature-dependent development, and mortality rate functions

Although rate functions generally connect the biological mechanisms of the species with the external environment, they strongly depend on the information available in the literature (Rossini et al., 2022b). To date, quantitative information about the development, mortality, fertility, and minimum development time is limited to temperature (Quinn, 2017; Ratkowsky and Reddy, 2017). In what follows, we recall the rate functions (and their parameters) included in the model (3), retrieved from life tables studies and publicly available datasets.

2.3.1. Development rate functions

The temperature-dependent development rates considered for the sake of this study have been retrieved from Baser et al. (2025b) together with the best fit parameters listed in Table 1. It is worth noting that the dependence on time t is implicitly included within the temperature $T(t)$ that is supposed to change over time in a natural environment. For the sake of notation, in what follows we do not report explicitly this dependence, which has however been considered during the simulations.

Proceeding by order:

- The thermal development of the egg stage, $G_E(t)$, can be represented by the Sharpe and De Michele development rate function (Schoolfield et al., 1981; Sharpe and DeMichele, 1977):

$$G_E = \frac{T\exp\left(A - \frac{B}{T}\right)}{1 + \exp\left(C - \frac{D}{T}\right) + \exp\left(E - \frac{F}{T}\right)} \tag{4}$$

where A, B, C, D, E, and F are thermodynamic parameters related to the enzyme kinetics (Rossini et al., 2019a).

- The thermal development of the first larval instar, $G_{L_1}(t)$, and pupa, $G_P(t)$, can be described by the Brière development rate function (Briere et al., 1999):

$$G_{L_1}, G_P = a\ T\ (T - T_L)\ (T_M - T)^{\frac{1}{m}} \tag{5}$$

where a and m are empirical parameters, T_L and T_M are the lower and upper thermal thresholds below and above which the development is theoretically not possible, respectively.

- The thermal development of the second larval instar, $G_{L_2}(t)$, can be described by the Logan rate function (Logan et al., 1976):

$$G_{L_2} = \psi\left[\exp\ (\rho\ T_M) - \exp\left(\rho\ T_M - \frac{T_M - T}{\Delta T}\right)\right] \tag{6}$$

where ψ and ρ are empirical parameters, T_M is the maximum temperature above which the development is theoretically not possible, and ΔT is the temperature range between the maximum of the Eq. (6) and T_M.

- The thermal development of the third larval instar, G_{L_3}, and the survival rate of both adult males, G_{A_m} and females (non-mated and mated), $G_{A_{nmf}}(t)$ and $G_{A_{mf}}(t)$, can be best represented by the Lactin-1 rate function (Lactin et al., 1995):

Table 1
List of development rate functions parameters considered for the *Drosophila suzukii* case study (Baser et al., 2025b).

Life stage	Development[1] rate function	Best fit parameters
Egg	Sharpe and De Michele (4)	$A = 4.78$ $B = -113.99$ $C = 20.44$ $D = 272.13$ $E = 6.76$ $F = -137.53$
L1	Brière (5)	$a = (1.00 \pm 0.06)\cdot 10^{-3}$ $T_L = 3 \pm 2$ $T_M = 32.02 \pm 0.03$ $m = 6 \pm 1$
L2	Logan (6)	$\psi = 0.043 \pm 0.008$ $\rho = 0.12 \pm 0.01$ $T_M = 32.3 \pm 0.2$ $\Delta T = 2.2 \pm 0.4$
L3	Lactin-1 (7)	$\rho = 0.185 \pm 0.006$ $T_M = 33.0 \pm 0.3$ $\Delta T = 5.4 \pm 0.2$
Pupa	Brière (5)	$a = (5 \pm 3)\cdot 10^{-5}$ $T_L = 7 \pm 1$ $T_M = 35 \pm 2$ $m = 1.0 \pm 0.2$
Adult males	Lactin-1 (7)	$\rho = 0.10 \pm 0.04$ $T_M = 35 \pm 5$ $\Delta T = 9 \pm 3$
Adult females (non-mated and mated)	Lactin-1 (7)	$\rho = 0.10 \pm 0.01$ $T_M = 35 \pm 1$ $\Delta T = 10 \pm 1$

[1] In the case of adults, the corresponding equations assume the meaning of *survival rate*, as there is no further stage to develop to.

$$G_{L_3}, G_{A_{nmf}}, G_{A_{mf}} = \exp(a\ T) - \exp\left(a\ T_M - \frac{T_M - T}{\Delta T}\right) \tag{7}$$

where a is an empirical parameter, T_M is the maximum temperature above which the development is not theoretically possible, and ΔT is the temperature range between the maximum of the function (7) and T_M.

2.3.2. Mortality rate function

Although Baser et al. (2025b) provided a set of temperature-dependent mortality rate functions, for the sake of this study we have considered the following compound exponential function (Ndjomatchoua et al., 2025, 2024):

$$M_i = \exp\left[a\ T^2 + b\ T + c\right] \tag{8}$$

where a, b, and c are empirical parameters. The Eq. (8) is more performant than the bathtub equation from Wang et al. (2002) and it was considered to describe the mortality rates of the $i = E,\ L_1,\ L_2,\ L_3$ stages. At the current state of the art, no information about the temperature-dependent mortality for pupae is available; therefore, it has been set to zero. The parameters of the Eq. (8) were estimated by using the raw dataset published by Baser et al. (2025b) according to the procedure detailed in Section 2.5.

2.3.3. Modelling temperature and time dependant delays τ

Estimation of the minimum development times from raw life tables datasets through the bootstrap method.

A key methodological innovation introduced with this study is the implementation of the *bootstrap* method to directly estimate the stage-minimum development times from life tables raw datasets. In this specific example, each temperature dataset in Baser et al. (Baser et al., 2025b) (6,9, 13, 18, 20, 24, 25, 26, 27, 28, 29, 31, 32, and 33 °C) was analysed, for each life stage (E, L1, L2, L3, P), as follows.

1. The development time of each specimen constitutes an element of the input array, $\overrightarrow{D_0}$. The length of $\overrightarrow{D_0}$ corresponds to the number of individuals which successfully developed to the next life stage, N.
2. The values contained in $\overrightarrow{D_0}$ were randomly assigned to 10 subgroups ($d_1, d_2, \ldots, d_{10}$) composed of 5 values each, respecting a one-to-one assignment.
3. Each subgroup d_i was inspected and the lowest value stored as a result. This step identifies the individual of the subgroup having the shortest (the minimum) development.
4. The process at step 1–3 was repeated for 10^6 times, providing an array of 10^7 *local* minimal values.
5. The mean and the standard deviation of the local minimal values was computed, to obtain the minimum development time for the corresponding life stage and temperature.

This analysis was carried out through an *ad hoc* Python (vers. 3.11) script that included the *multiprocessing, random, pandas*, and *numpy* packages.

Temperature-dependent minimum development times

A set of empirical functions was considered to interpolate the minimum development times, per stage and per temperature, computed from the life tables dataset through the bootstrap method. The resulting best fit functions provide the temperature-dependent profile $\tau_i[T(t)]$ required by the model (3). This procedure recalls the methodology described in Rossini et al. (2025a) and is based on the idea of testing sets of empirical functions and taking, as representative, the one reporting the better fitting performance. Considering the shape of the datasets and a good compromise between mathematical complexity and number of parameters to estimate with respect to the size of the dataset, the following functions have been tested:

$$\tau(T) = \frac{aT^2 + bT + c}{T + d} \tag{9}$$

$$\tau(T) = a\, e^{b\, T} \tag{10}$$

$$\tau(T) = a\, T^2 + b\, T + c \tag{11}$$

$$\tau(T) = \frac{a\, T + b}{T + c} \tag{12}$$

$$\tau(T) = a\, T^b + c \tag{13}$$

$$\tau(t) a + b\, e^{c\, T} \tag{14}$$

The methodology applied to estimate the best fit parameters, instead, is described in Section 2.5.

2.4. Experimental protocol for model validation under controlled environment

The model (3), parameterised as described in the previous sections, was validated as described hereafter. Five experiments at different constant temperatures (10,16, 28, 30, and 32 (±1) °C) and constant relative humidity (65% RH) were carried out at IPM Lab of CIHEAM Institute by following the experimental protocol of Baser et al. (2025b). The five temperatures ranged within the thermal spectrum of *D. suzukii*. Notably, the experiment at 28 °C acts as a reference between the parameterisation and validation datasets, while the other temperatures were chosen to challenge the model and to test its reliability in case of temperatures intermediate with respect to the parameterisation dataset. Data were collected according to the standard guidelines for life tables introduced in Rossini et al. (2025c), (2024) and involved the same Apulian strain of *D. suzukii* considered by Baser et al. (2025b).

2.4.1. Wild type and continuous rearing

A continuous rearing of the Apulian strain of *D. suzukii* was established on 11 October 2012 by collecting specimens from the organic vineyard located at CIHEAM Bari (41.053674, 16.877897 E) (Baser et al., 2015). Populations were continuously maintained at 24 °C, 65% RH, and 16/8 L:D in Plexiglas cages (50 × 40 × 40 cm) that allowed ventilation. The same diet medium described in Baser et al. (2025b), (2025a) was placed in Petri dishes and served as a food source for juvenile stages and as an oviposition substrate for adults. The oviposition surface was increased with blueberries fruits, while water was ensured through wet tissues. Periodic injections of wild adults collected from the field have been carried out to refresh the population and avoid possible adaptation to laboratory conditions.

2.4.2. Stage-population dynamics at different constant temperatures

Groups of 50 newly laid eggs have been collected from the continuous rearing and placed individually on Petri dishes containing the artificial diet. The plates were subsequently stored in growth chambers (FDM-Environment Makers, Rome, Italy) equipped with a neon light set to 16:8 (light:dark). A data logger (EL-USB-2+, Lascar Electronics, Whiteparish, UK) double checked that the temperatures were maintained constant for the entire duration of the experiment. The relative humidity was kept constant at 70 ± 5%.

The life stage of each individual was checked at regular sampling ranges using a stereomicroscope: the specimens were monitored by an expert observer every 24 h at 10 and 16 °C, every 6 h at 28 °C and 30 °C, and every 4.5 h at 32 °C. During the observations, eggs and larval stages were identified following the indications of Van Timmeren et al. (2017). The end point of each experiment was marked by the death of the last individual of the initial cohort.

2.5. Parameter estimation and numerical solutions

The parameters of the temperature-dependent mortality rate function (8) and minimum development times (9)- (13), along with their standard errors, were estimated through Python (v. 3.11) scripts that recall the packages *scipy* (v. 1.15.2), *numpy* (v. 2.2.0), *pandas* (v. 2.2.3), and *matplotlib* (v. 3.10.1). The goodness-of-fit was assessed through a χ^2 test, the coefficient of determination R^2, and number of degrees of freedom (NDF) (Ratkowsky and Reddy, 2017; Rossini et al., 2020c, 2020b).

Numerical solutions of the model (3) were obtained through an *ad hoc* Python script that recalls the packages *ddeint* (v. 0.3.0), *scipy, Numpy, pandas*, and *matplotlib*. The initial history of the DDE model was set as

$$H_0 = 2\, \vartheta(t) \cdot \vec{x}_0 \tag{15}$$

where $\vartheta(t)$ is the Heaviside theta defined as

$$\vartheta(t) = \begin{cases} 0 \; if \; t < 0 \\ \frac{1}{2} \; if \; t = 0 \\ 1 \; if \; t > 0 \end{cases} \tag{16}$$

The vector $\vec{x}_0$ has the same size of the state vector (2) and denotes the number of individuals initially placed in the growth chamber. For the sake of this study, $x_E(0) = 50$ and all the other states were set to zero. In this way, there was a one-to-one relation between the experimental configuration at the beginning of each growth chamber experiment and the initial history of the model (3). The last input needed to solve the model (3) was the time series of environmental temperatures. As the experiments were conducted at different constant temperatures, we have considered the temperature value of the corresponding validation datasets.

All the script and the dataset to fully reproduce the results of this

Table 4
Best fit parameters and associated standard errors (± SE) of the mortality rate function (8) for eggs, L1, L2 and L3. The goodness of fit was based on R^2 and χ^2.

Life stage	Parameters	Goodness-of-fit values
Egg	$a = 0.013 \pm 0.002$ $b = -0.48 \pm 0.07$ $c = 2.3 \pm 0.4$	$R^2 = 0.89$ $\chi^2 = 0.02$ $NDF = 11$
L1	$a = 0.014 \pm 0.001$ $b = -0.55 \pm 0.05$ $c = 2.6 \pm 0.3$	$R^2 = 0.95$ $\chi^2 = 0.005$ $NDF = 11$
L2	$a = 0.017 \pm 0.002$ $b = -0.66 \pm 0.09$ $c = 3.3 \pm 0.5$	$R^2 = 0.93$ $\chi^2 = 0.01$ $NDF = 11$
L3	$a = 0.019 \pm 0.003$ $b = -0.7 \pm 0.1$ $c = 3.6 \pm 0.7$	$R^2 = 0.92$ $\chi^2 = 0.16$ $NDF = 11$

study are publicly available at: https://github.com/lucaros1190/DDERevised2025.

3. Results

3.1. Fit results: mortality rates and minimum development times over temperature

The first result of this study concerns the model parameter estimation. The best fitting parameters of the mortality rate function (8), along with their standard errors and goodness-of-fit indicators, are listed in Table 4 for the egg-to-L3 stages.

The numerical values of the minimum development times over temperature (mean ± standard deviation), computed with the bootstrap method, are reported in the Appendix for the temperatures where the development was effectively assessed. The values were subsequently analysed according to Section 2.3.3 and the best fitting functions, their parameters, and standard errors are listed in Table 5. For the sake of readability, we hereby report only the values corresponding to the best fitting functions, among (9)- (14), for the different life stages; the most interested readers can refer to the GitHub repository for a complete overview.

3.2. Model validation

The results of the previous section complemented the parameterisation of the model (3). This section reports the validation in the case of the five *ad hoc* experiments carried out under controlled conditions.

Table 5
Best fit minimum development times functions (parameters ± SE)) for the egg-pupa stages of *Drosophila suzukii*. The goodness-of-fit is expressed by the coefficient of determination R^2 and the χ^2-value. NDF stands for the number of degrees of freedom.

Life stage and best fit function	Best fit parameters	Goodness of fit parameters
Egg Equation (9)	$a = 0.4 \pm 0.1$ $b = -19 \pm 5$ $c = 240 \pm 60$ $d = 13 \pm 5$	$R^2 = 0.99$ $NDF = 10$ $\chi^2 = 0.02$
L1 Eq. (11)	$a = 0.011 \pm 0.002$ $b = -0.63 \pm 0.06$ $c = 9.7 \pm 0.5$	$R^2 = 0.97$ $NDF = 10$ $\chi^2 = 0.15$
L2 Eq. (11)	$a = 0.011 \pm 0.001$ $b = -0.63 \pm 0.05$ $c = 10.4 \pm 0.5$	$R^2 = 0.99$ $NDF = 8$ $\chi^2 = 0.05$
L3 Eq. (11)	$a = 0.015 \pm 0.004$ $b = -0.9 \pm 0.2$ $c = 14 \pm 2$	$R^2 = 0.96$ $NDF = 7$ $\chi^2 = 0.03$
Pupa Eq. (14)	$a = 4.50 \pm 0.09$ $b = 2000 \pm 1000$ $c = -0.43 \pm 0.05$	$R^2 = 0.99$ $NDF = 6$ $\chi^2 = 0.001$

Proceeding by order, the first validation explored the behaviour of the model at 10 °C, as showed in Fig. 2. The stage-development over time of the 50 eggs was well estimated by the model, both in terms of timing and peak of the population. Slight deviations between model and data were observed for the L1 and L2 stages, where the model estimated a lower number of individuals on the peak and a slightly delayed reduction of the population on the right.

The second validation explored the behaviour of the model at 16 °C, as showed in Fig. 3. The stage-development over time of the 50 eggs was possible until the emergence of pupae, but from an experimental point of view no pupae reached the adult stage. For the sake of validation, we focus mainly on the egg-to-pupa stage. Where the development was observed, the model and the experimental data showed a good accordance, except a slight underestimation of the maxima by the model. In terms of timing, the emergence of the individuals was coherent between model and data except for the pupae, where the simulation was slightly anticipated. In the case of L2 and L3, instead, the simulation was slightly delayed on the right, estimating a slower decline of the population with respect to the observations.

The third validation explored the behaviour of the model at 28 °C, as showed in Fig. 4, and acts as a reference between the parameterisation and the validation dataset. Notably, this temperature is close to the optimal for the development of the species and should be characterised, in line of principle, by fast development and low mortality. The validation dataset faithfully reproduced the experimental protocol of the parameterisation dataset, including the temperature set for the rearing. The stage-development over time of the 50 eggs was coherent between the model and the experimental dataset, except for the adult stages. Slight deviations were observed between estimated and experimental pupae, as the model overestimated the number of individuals and the timing. The greatest deviation, however, has been observed for the adult stages. According to the model, adults should emerge more slowly and survive longer, while the experimental data suggest a faster development.

The fourth validation explored the behaviour of the model at 30 °C, as showed in Fig. 5. The stage-development over time of the 50 eggs was possible until the emergence of the L3, but no specimens reached the pupa stage. As in the case of 16 °C, accordingly, we focus on the egg-to-L3 stages only, for validation purposes. The model underestimated the population abundance of L1, even if the timing between estimation and observation was coherent. Conversely, the model slightly overestimated the timing of L2 and L3, anticipating the emergence of a few time steps and indicated a higher population in the case of L3. Overall, the differences were not marked, considering the size of the sampling range and the population abundance.

The fifth and last validation explored the behaviour of the model at 32 °C, as showed in Fig. 6, a temperature value close to the upper thermal threshold of the species. The stage-development over time of the 50 eggs was possible until the emergence of the L1, but no specimens reached the L2 stage. As for the previous cases at 16 and 30 °C, for model validation purposes we hereby focus only on the stages where the development of the species was observed. In this case the population dynamics estimated by the model was in accordance with the observations, although there has been a slight overestimation of the decline over time of the L1 population.

4. Discussion and conclusion

This work introduced a new physiologically-based model that describes the stage-development of terrestrial arthropods in connection with the external environment. The model was described by a series of delay differential equations and included the main biological mechanisms driving the population dynamics. This study followed the line and completed the development of a general model describing terrestrial arthropods conducted by Rossini et al. (2025a), (2022a), (2021a). The main novelty stands on the introduction of the development and tran-

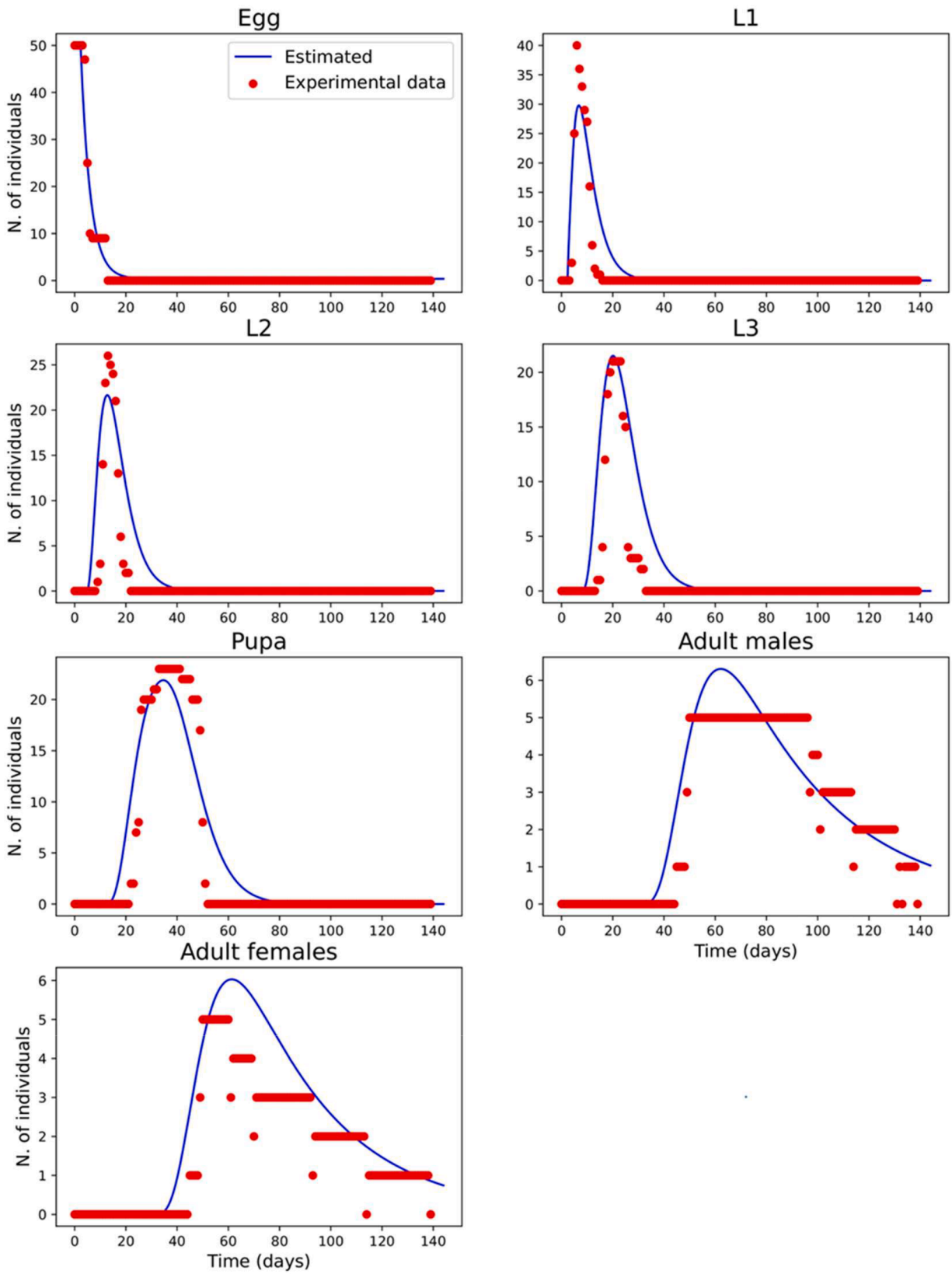

Fig. 2. Comparison between model estimation (blue line) and experimental data (red dots) across all the *Drosophila suzukii* life stages at 10 °C.

sient substages, two *states* associated to a single *life stage* which ensure a more reliable description of the biology of terrestrial arthropods and mass balance conservation at each time t in the preimaginal stages. This problem is not relevant in case of short minimum development times, but this condition could not be valid for all the species, as pointed out in the motivation of this study. The second theoretical novelty is the protocol to estimate the minimum development times from life tables raw datasets, based on the bootstrap, which also remarks the paramount

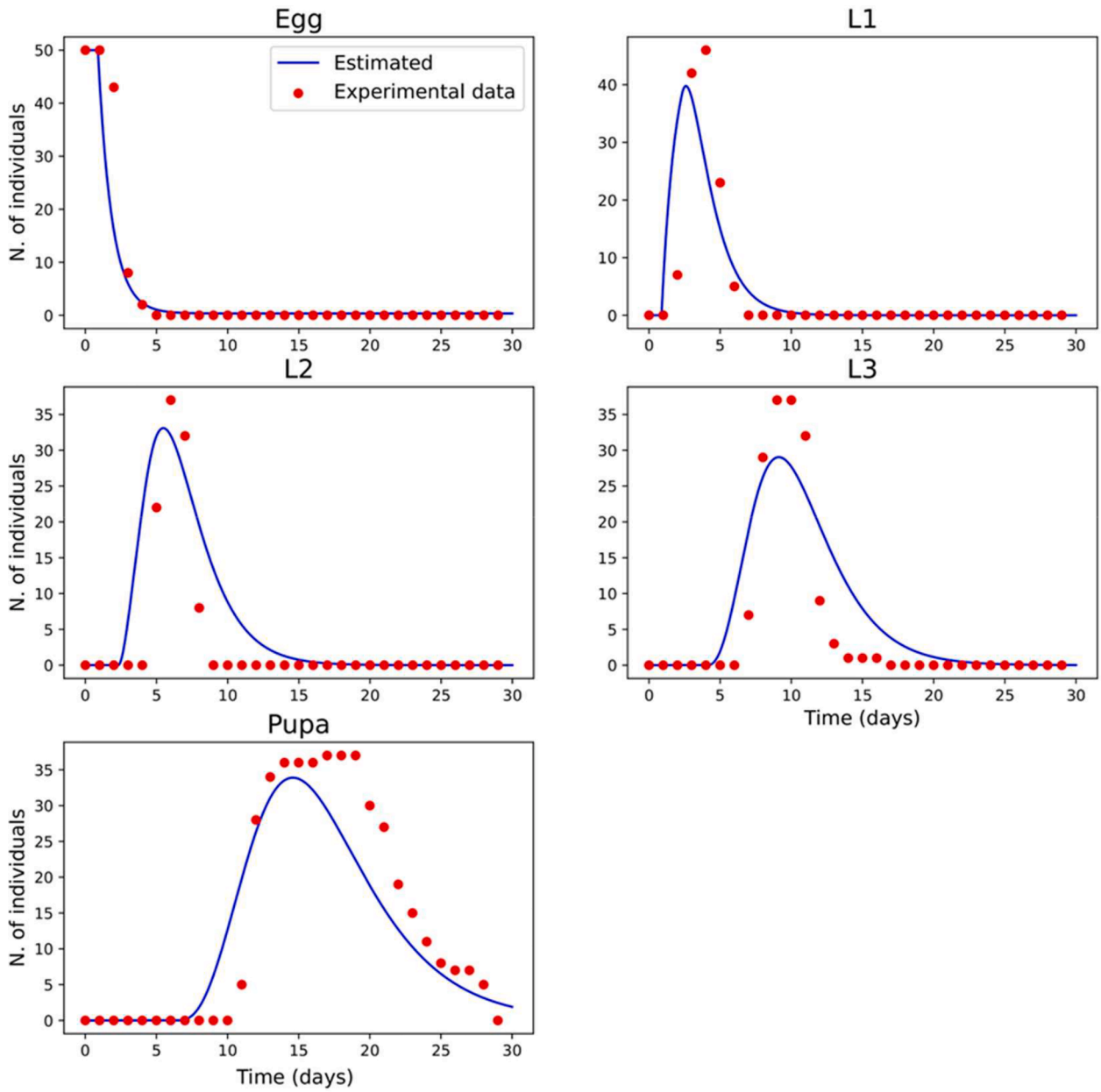

Fig. 3. Comparison between model estimation (blue line) and experimental data (red dots) across all the *Drosophila suzukii* life stages at 16 °C.

importance of sharing life tables data to allow model parameterisation. The procedure and the code were made publicly available and can be easily adapted to any other species. The novelty from the experimental point of view, instead, was the validation under controlled conditions, which allowed a comparison between model and observations for all the life stages where the development has been possible. Moreover, the validation in growth chamber was helpful to test the model in different points of the thermal spectrum of the species, ranging from the optimal to the extreme conditions.

At this purpose, it is worth pointing out that the model can generally account for transition rates depending on different environmental variables (temperature, relative humidity, photoperiod, diet, etc.) and population density (state-dependence). The case of *D. suzukii* considered only temperature as main driving parameter, but this is not a limitation for the general theory, which can be applied to any other terrestrial arthropod by following the very same rationale showed in this study. The main challenge behind model application, in fact, is the identification of its parameters, which require *ad hoc* experiments that can be oriented and set based on the biological features of the species under study. The slight discrepancies observed in the experimental validation, accordingly, can be further overcame by exploring, *via* life tables, other driving factors.

The general model (1) is flexible enough to be adapted to many other terrestrial arthropods and provides a detailed description of the main biological traits, while keeping the computational complexity low, still. Its flexibility, moreover, allows us to connect multiple single species model to compose a general multitrophic model describing the interaction between multiple organisms co-living in the same ecological niche, extending the concept introduced in (Buffoni et al., 2001; Chen, 2005; Gutierrez and Baumgärtner, 1984). The biological knowledge on the mechanisms of interaction between *Multiple species* can be in fact described by specific mathematical terms inserted into the corresponding equations. Analogously, the flexibility of the model (1) allows to model the effect of management actions, which is fundamental for the development of reliable decision support systems for integrated pest management. Lastly, the model (1) preserves and extends the properties

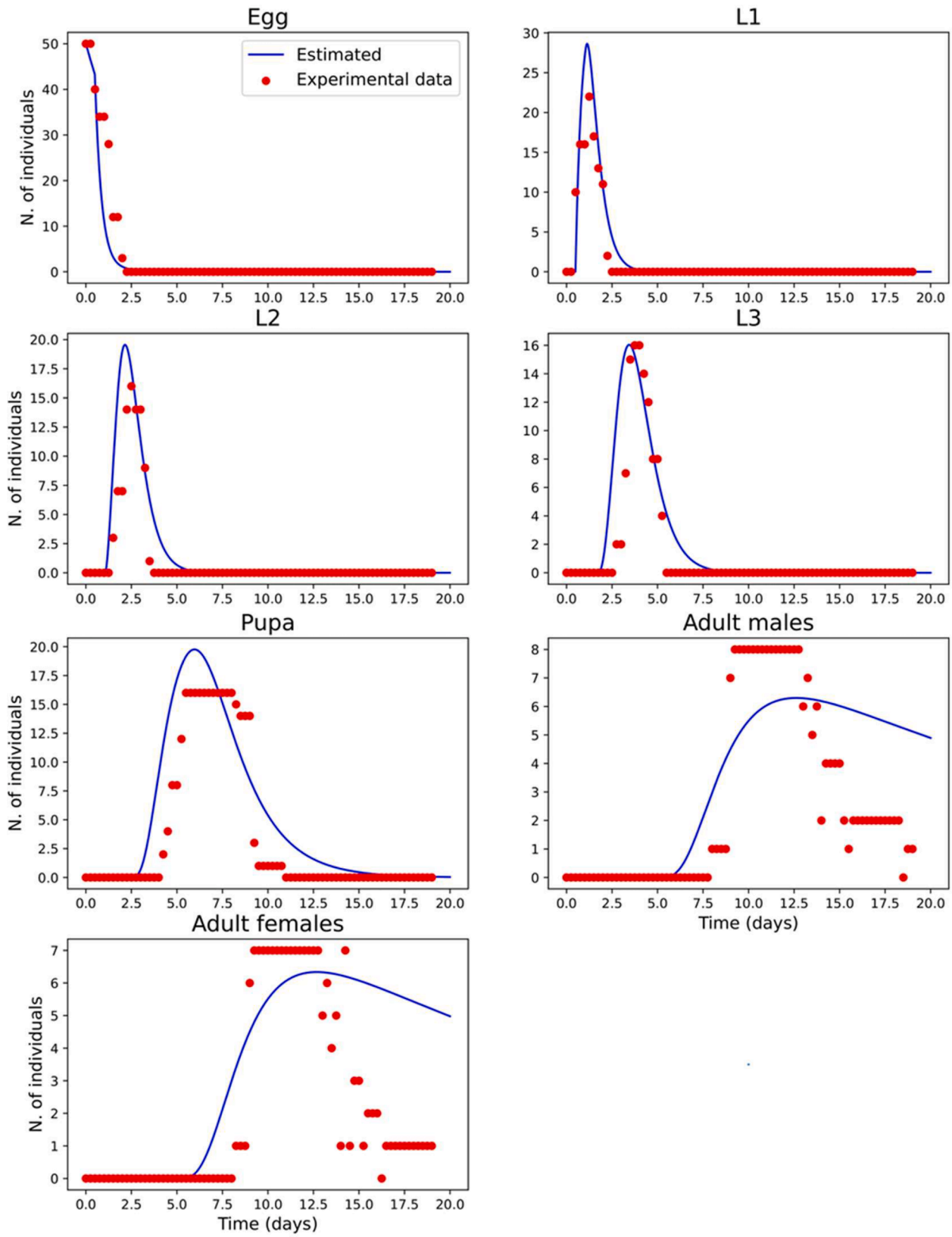

Fig. 4. Comparison between model estimation (blue line) and experimental data (red dots) across all the *Drosophila suzukii* life stages at 28 °C.

of its predecessors, and can be both spatialised according to Rossini et al. (2022a) and complemented with state observers to improve its estimation based on the field data, according to Bono Rossello et al. (2022), Bono Rosselló et al. (2023).

Although the advantages of adopting the model (1) are high, there are some disadvantages, as well. The first disadvantage is related to the higher number of parameters needed by the model. This requirement might limit the application of the model to all the case studies for which

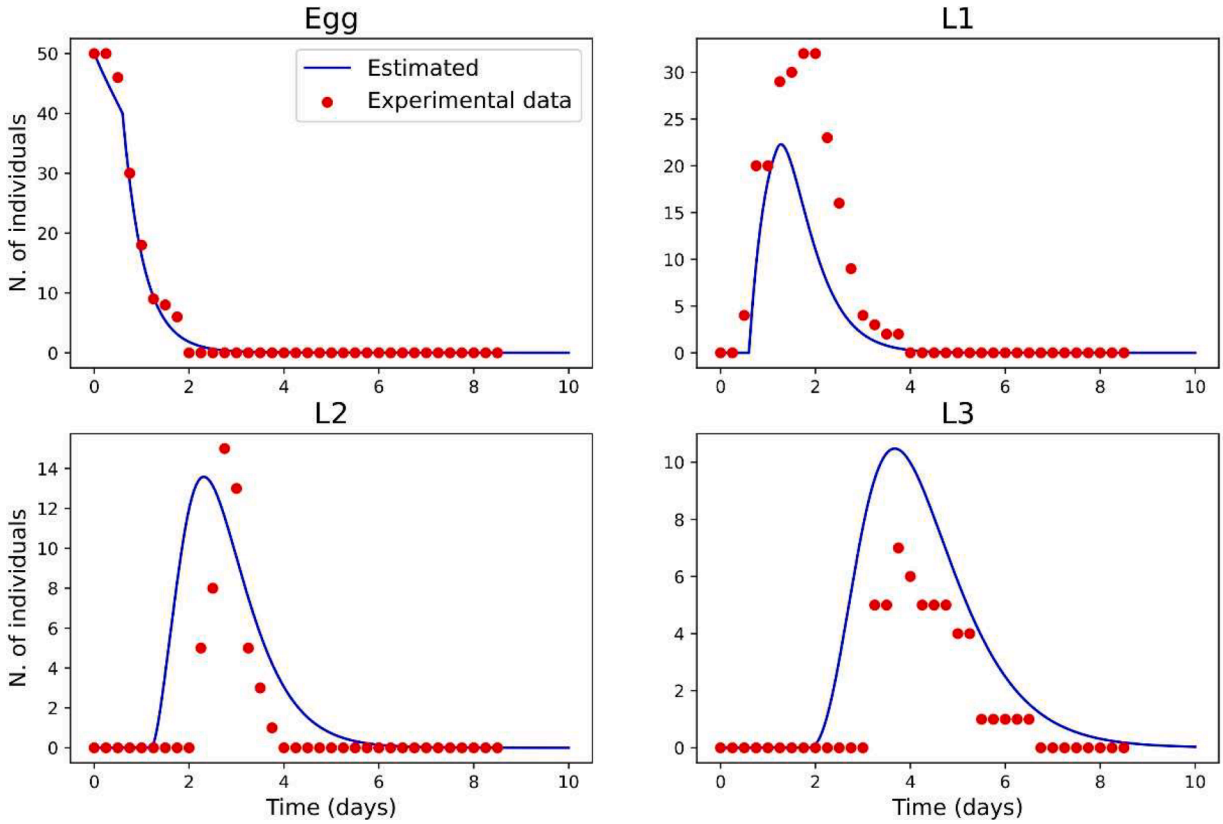

Fig. 5. Comparison between model estimation (blue line) and experimental data (red dots) across all the *Drosophila suzukii* life stages at 30 °C.

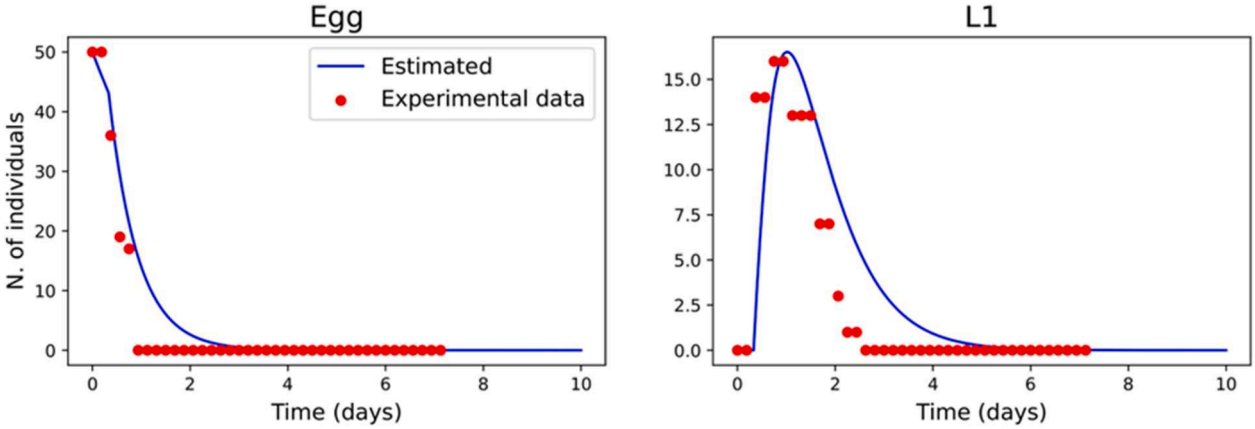

Fig. 6. Comparison between model estimation (blue line) and experimental data (red dots) across all the *Drosophila suzukii* life stages at 32 °C.

life tables are not (or only partially) available. This issue can be overcome in two ways, however. In case the quantitative information is not detailed as in the case of *D. suzukii*, it is possible to aggregate multiple preimaginal stages, as its number can be defined arbitrarily, or to consider only one female substage by setting the corresponding transition rates to zero. In case there is partial information on the minimum development times, it is possible to use the former associated models, which are still valid under the approximations described in Section 2.1. The second disadvantage is the difficult distinction between development and transient substages from an experimental point of view. This criticality can be overcome by more in-depth studies on the physiology of terrestrial arthropods, which can also be beneficial for further parameterisation protocols or theoretical improvements of the model. The validation in the case of *D. suzukii* shows that a combination of the solutions of the development and transient stages leads to a faithful description of the overall stage population dynamics.

The model validation also showed the logic process which connects the theory to the application and was used as a bench test to assess the reliability of the improvements that this study introduced from the theoretical point of view. Besides being a case of high agronomic relevance, *D. suzukii* is one of the few species for which many quantitative information on its biology is available in the current literature. This case might inspire studies aimed to explore other species and might be considered as a reference for testing other models, allowing an easier comparison of the performance.

From a more applied point of view, the general protocol to estimate the minimum development times represents a pillar on which other studies can be built. The methodology presented in this paper enhances the connection between life tables studies and model development and complements the theoretical background of life tables analysis. The

minimum development time, in fact, is a quantitative biological information that, to the best of our knowledge, has never been considered in life tables analyses, so far. Besides the stage-development time, in fact, knowing the minimum time required by the species to observe the development of at least one individual to the next stage, under different growth conditions, can improve pest control programs and highlight differences due to phenomena of adaptation to different environments (Rossini et al., 2024). It is worth pointing out that in case of scarcity of data and/or unavailability of raw datasets to apply the bootstrap method, the approximation based on the properties of the Gaussian distribution introduced by Rossini et al. (2025a) is still valid.

Bootstrap and resampling methods have already been applied to analyse life tables data. Notably, recent studies (Amir-Maafi et al., 2022; Chi et al., 2023, 2020; Moshtaghi Maleki et al., 2016) proposed an adaptation of the bootstrap method to improve the estimation of the stage-development time distributions, which is similar to what we have proposed in this study for the minimum development time. Methods based on resampling allow us to compensate the small dataset sizes (Fisher and Hall, 1991), mainly because of the cost in terms of time and personnel associated with the experiments, which usually affect life tables data (Rossini et al., 2025c). Accordingly, this part of our study is in line with the current literature and explores an additional aspect that might increase the quality of further life tables studies.

From a modelling perspective, instead, the minimum development times estimated *via* the bootstrap method and then interpolated with the empirical functions (9)- (14) provided a good overlap between model and observations, as only some slight differences were assessed on the emergence of the individuals. The role of this parameter is to ensure that the minimal duration of each stage is respected. Validation results (left sides of the plots in Figs. 2–6) showed that there is a good accordance between model estimations and observations, confirming the validity of the methodology introduced in this paper.

Although from a general point of view the model faithfully reproduced the experimental data, some slight deviations were observed. There might be different reasons behind those deviations which deserve further discussion. For instance, at temperatures close to the thermal limits of the species, secondary physiological mechanisms can become dominant, ensuring the survival of the species in case of adverse environmental conditions (Fraimout et al., 2018). These effects might require a modification of the model parameters, to be correctly described. At the same time, unaccounted factors (e.g., faster egg production and lay, faster development processes) can affect adult survival in temperatures close to the optimum, as shown in the case at 28 °C. The use of state observers (e.g., the Extended Kalman Filter) can compensate slight deviations and can be an alternative solution while waiting for further investigations providing an improvement of model parameterisation.

An additional aspect worthy of discussion concerns the uncertainty associated with the model and with the experimental data. Unfortunately, the estimation of the uncertainty associated with the counting in life tables experiment is unknown. The temperature in growth chambers, in fact, has a variability of ±1°C, which might affect the development of the species. We do not expect large effects on the population dynamics, but it might affect the experiments close to the thermal limits. Conversely, the model simulated only the *best scenario*, as we have considered the expected value of its parameters for validation purposes. In further studies it might be possible to variate the value of the parameters in the range of their uncertainty, to better explore how deviations from the expected values modify the solution. Although this is an interesting aspect, it was far from the aim of this study.

In conclusion, this study highlighted different aspects of modelling terrestrial arthropods, remarking the importance of maintaining the connection between mathematical formalisation and biological mechanisms. Life tables studies and, more in general, experiments carried out under controlled conditions are fundamental in this process, as they provide the information on which the model is particularised to the case under investigation and the set of quantitative information for model parameterisation. This study clearly showed this dependency and analysed, step by step, the procedure which leads the theory to become an application. We strongly believe that the methodological aspects and the concepts introduced with this study can be applied to other species and can also support the development of models based on different mathematical theories, defining a common root in modelling terrestrial arthropods.

CRediT authorship contribution statement

Luca Rossini: Writing – review & editing, Writing – original draft, Visualization, Validation, Software, Methodology, Investigation, Formal analysis, Data curation, Conceptualization. **Zeinab Sweidan:** Writing – review & editing, Visualization, Validation, Investigation, Formal analysis, Data curation. **Nuray Baser:** Writing – review & editing, Methodology, Investigation, Data curation, Conceptualization. **Marta Corbetta:** Writing – review & editing, Formal analysis, Data curation. **Tito Caffi:** Writing – review & editing, Resources, Funding acquisition. **Gianfranco Anfora:** Writing – review & editing, Methodology. **Stefania Gualano:** Writing – review & editing, Investigation, Data curation. **Vittorio Rossi:** Writing – review & editing, Resources, Funding acquisition. **Franco Santoro:** Writing – review & editing, Resources, Methodology, Investigation, Funding acquisition, Data curation, Conceptualization. **Emanuele Garone:** Writing – review & editing, Resources, Methodology, Investigation, Funding acquisition, Conceptualization.

Declaration of competing interest

The authors have no relevant financial or non-financial interests to disclose.

Acknowledgements

L.R. was funded by the European Commission under the Marie Sklodowska Curie Actions Postdoctoral Fellowship (MSCA-PF-2022) project “PestFinder” Grant n. 101102281 and by the HORIZON-JU-CBE-2024 project “ZELDA”, Grant n. 101214981. The dataset hereby published was produced by CIHEAM Bari within the Master of Science in Innovative Approaches to IPM of Mediterranean Fruit and Vegetable Crops, Master thesis of Zeinab Sweidan.

Appendix

Table A1

Table A1
Mean and standard deviation of the minimum development times estimated using the bootstrap method for the egg, L1, L2, L3, and pupa stages along the different temperatures (6,9, 13, 18, 20, 24, 25, 26, 27, 28, 29, 31, 32, and 33 °C) explored by Baser et al. (2025b). These values were subsequently interpolated by using the Eqs. (9)- (14).

T(°C)	Mean ± SD				
	Egg	L1	L2	L3	P
6	7.8 ± 0.8	6 ± 0	–	–	–
9	4.6 ± 0.5	5.1 ± 0.4	5.5 ± 0.5	6.9 ± 0.7	–
13	2.6 ± 0.6	4.1 ± 0.4	4.2 ± 0.4	6.2 ± 0.4	12.4 ± 0.6
18	1.3 ± 0.3	1.8 ± 0.3	2.6 ± 0.3	2.7 ± 0.1	5.4 ± 0.2
20	1.2 ± 0.3	1.5 ± 0.2	2.2 ± 0.2	2.2 ± 0.2	5.1 ± 0.2
24	0.7 ± 0.2	1.2 ± 0.2	1.4 ± 0.2	1.9 ± 0.1	4.4 ± 0.3
25	0.6 ± 0.2	1.1 ± 0.2	1.334±0.009	1.6 ± 0.1	4.5 ± 0.2
26	0.6 ± 0.2	1.1 ± 0.1	1.1 ± 0.1	1.34±0.06	4.2 ± 0.2
27	0.6 ± 0.2	1 ± 0	1.1 ± 0.1	1.34±0.06	4.7 ± 0.1
28	0.8 ± 0.3	0.7 ± 0.1	1.0 ± 0.1	1.2 ± 0.2	4.6 ± 0.3
29	0.9 ± 0.1	0.88±0.08	1.1 ± 0.1	1.6 ± 0.2	4.7 ± 0.4
31	1.0 ± 0.1	1.0 ± 0.2	1.4 ± 0.2	–	–
32	1.52 ± 0.05	1.69 ± 0.04	–	–	–
33	2 ± 0	–	–	–	-

Data availability

Research Link Provided.

References

Adler, F., Smith, L., Castillo-Chavez, C., 1989. A distributed-delay model for the local population dynamics of a parasitoid-host system. In: Castillo-Chavez, C., Levin, S.A., Shoemaker, C.A. (Eds.), Mathematical Approaches to Problems in Resource Management and Epidemiology. Springer Berlin Heidelberg, Berlin, Heidelberg, pp. 152–162.

Al-Omari, J.F.M., Gourley, S.A., 2005. A nonlocal reaction-diffusion model for a single species with stage structure and distributed maturation delay. Eur. J. Appl. Math. 16, 37–51. https://doi.org/10.1017/S0956792504005716.

Amir-Maafi, M., Chi, H., Chen, Z.Z., Xu, Y.Y., 2022. Innovative bootstrap-match technique for life table set up. Entomol. Gen. 42, 597–609. https://doi.org/10.1127/entomologia/2022/1334.

Banks, H.T., Banks, J.E., Bommarco, R., Laubmeier, A.N., Myers, N.J., Rundlöf, M., Tillman, K., 2017. Modeling bumble bee population dynamics with delay differential equations. Ecol. Modell. 351, 14–23. https://doi.org/10.1016/j.ecolmodel.2017.02.011.

Baser, N., Matar, C., Rossini, L., Ibn Amor, A., Šunjka, D., Bošković, D., Gualano, S., Santoro, F., 2025a. Enhancing biological control of drosophila suzukii: efficacy of trichopria drosophilae releases and interactions with a native parasitoid. Pachycrepoideus Vindemiae. Insect. 16, 715. https://doi.org/10.3390/insects16070715.

Baser, N., Ouantar, M., Broutou, O., Lamaj, F., Verrastro, V., Porcelli, F., 2015. First finding of Drosophila suzukii (Matsumura) (Diptera: drosophilidae) in Apulia, Italy, and its population dynamics throughout the year. Fruits 70, 225–230. https://doi.org/10.1051/fruits/2015016.

Baser, N., Rossini, L., Anfora, G., Temel, K.M., Gualano, S., Garone, E., Santoro, F., 2025b. Thermal development, mortality, and fertility of an Apulian strain of Drosophila suzukii at different temperatures. Insects 16, 60. https://doi.org/10.3390/insects16010060.

Benhamouche, O., Rossini, L., Rosselló, N.B., Pezzutto, M., Turco, S., Garone, E., 2025. A win-win combination in plant disease prediction: field data to update model estimations, estimations to drive field data collection. Eur. J. Plant Pathol. https://doi.org/10.1007/s10658-025-03166-2.

Bono Rosselló, N., Rossini, L., Speranza, S., Garone, E., 2023. Towards pest outbreak predictions: are models supported by field monitoring the new hope? Ecol. Inf. 78, 102310. https://doi.org/10.1016/j.ecoinf.2023.102310.

Bono Rossello, N., Rossini, L., Speranza, S., Garone, E., 2022. State estimation of pest populations subject to intermittent measurements. IFAC-PapersOnLine 55, 135–140. https://doi.org/10.1016/j.ifacol.2022.11.128.

Briere, J.F., Pracros, P., Le Roux, A.Y., Pierre, J.S., 1999. A novel rate model of temperature-dependent development for arthropods. Env. Entomol. 28, 22–29. https://doi.org/10.1093/ee/28.1.22.

Buffoni, G., Di Cola, G., Garaventa, L., 2001. The local dynamics of a tri-trophic system. Ecol. Modell. 138, 31–39. https://doi.org/10.1016/S0304-3800(00)00391-4.

Buffoni, G., Pasquali, S., 2007. Structured population dynamics: continuous size and discontinuous stage structures. J. Math. Biol. https://doi.org/10.1007/s00285-006-0058-2.

Calabria, G., Máca, J., Bächli, G., Serra, L., Pascual, M., 2012. First records of the potential pest species drosophila suzukii (Diptera: drosophilidae) in Europe. J. Appl. Entomol. 136, 139–147. https://doi.org/10.1111/j.1439-0418.2010.01583.x.

Caswell, H., 2010. Life table response experiment analysis of the stochastic growth rate. J. Ecol. 98, 324–333. https://doi.org/10.1111/j.1365-2745.2009.01627.x.

Chen, F., 2005. On a nonlinear nonautonomous predator-prey model with diffusion and distributed delay. J. Comput. Appl. Math. 180, 33–49. https://doi.org/10.1016/j.cam.2004.10.001.

Chen, T., Zhang, H., Zhang, Y., Wang, Z., 2025. Stochastic disturbances and delays drive coexistence and extinction in competing populations. Ecol. Modell., 111155 https://doi.org/10.2139/ssrn.5108620.

Chi, H., 1988. Life-table analysis incorporating both sexes and variable development rates among individuals. Env. Entomol. 17, 26–34. https://doi.org/10.1093/ee/17.1.26.

Chi, H., Kavousi, A., Gharekhani, G., Atlihan, R., Salih Özgökçe, M., Güncan, A., Gökçe, A., Smith, C.L., Benelli, G., Guedes, R.N.C., Amir-Maafi, M., Shirazi, J., Taghizadeh, R., Maroufpoor, M., Xu, Y.Y., Zheng, F.Q., Ye, B.H., Chen, Z.Z., You, M. S., Fu, J.W., Li, J.Y., Shi, M.Z., Hu, Z.Q., Zheng, C.Y., Luo, L., Yuan, Z.L., Zang, L.S., Chen, Y.M., Tuan, S.J., Lin, Y.Y., Wang, H.H., Gotoh, T., Shaef Ullah, M., Botto-Mahan, C., De Bona, S., Bussaman, P., Gabre, R.M., Saska, P., Schneider, M.I., Ullah, F., Desneux, N., 2023. Advances in theory, data analysis, and application of the age-stage, two-sex life table for demographic research. Biol. Contr. Pest Manag.. Entomol. Gen. 43, 705–732. https://doi.org/10.1127/entomologia/2023/2048.

Chi, H., Liu, H., 1985. Two new methods for the study of insect population ecology. Bull. Inst. Zool. 24, 225–240.

Chi, H., You, M., Atlıhan, R., Smith, C.L., Kavousi, A., Özgökçe, M.S., Güncan, A., Tuan, S.J., Fu, J.W., Xu, Y.Y., Zheng, F.Q., Ye, B.H., Chu, D., Yu, Y., Gharekhani, G., Saska, P., Gotoh, T., Schneider, M.I., Bussaman, P., Gökçe, A., Liu, T.X., 2020. Age-stage, two-sex life table: an introduction to theory, data analysis, and application. Entomol. Gen. 40, 103–124. https://doi.org/10.1127/entomologia/2020/0936.

Chou, T., Greenman, C.D., 2016. A hierarchical kinetic theory of birth, death and fission in age-structured interacting populations. J. Stat. Phys. 164, 49–76. https://doi.org/10.1007/s10955-016-1524-x.

Cini, A., Ioriatti, C., Anfora, G., 2012. A review of the invasion of Drosophila suzukii in Europe and a draft research agenda for integrated pest management. Bull. Insectol. 65, 149–160.

Corbetta, M., Caffi, T., Guario, A., Lasorella, V., Rossi, V., Rossini, L., 2026. Testing a delay differential equation model for the population dynamics of Frankliniella occidentalis in table grape vineyards of Southern Italy. Crop. Prot. 205, 107610. https://doi.org/10.1016/j.cropro.2026.107610.

Crauste, F., Hbid, M.L., Kacha, A., 2008. A delay reaction-diffusion model of the dynamics of botulinum in fish. Math. Biosci. 216, 17–29. https://doi.org/10.1016/j.mbs.2008.07.012.

Dalton, D.T., Walton, V.M., Shearer, P.W., Walsh, D.B., Caprile, J., Isaacs, R., 2011. Laboratory survival of Drosophila suzukii under simulated winter conditions of the Pacific Northwest and seasonal field trapping in five primary regions of small and stone fruit production in the United States. Pest Manag. Sci. 67, 1368–1374. https://doi.org/10.1002/ps.2280.

Diekmann, O., Gyllenberg, M., Metz, J.A.J., 2020. Finite dimensional state representation of physiologically structured populations. J. Math. Biol. 80, 205–273. https://doi.org/10.1007/s00285-019-01454-0.

Divya, B., Kavitha, K., 2020. A review on mathematical modelling in biology and medicine. Adv. Math. 9, 5869–5879. https://doi.org/10.37418/amsj.9.8.54.

Emiljanowicz, L.M., Ryan, G.D., Langille, A., Newman, J., 2014. Development, reproductive output and population growth of the fruit fly pest <I>Drosophila suzukii</I>(Diptera: drosophilidae) on artificial diet. J. Econ. Entomol. 107, 1392–1398. https://doi.org/10.1603/EC13504.

Fisher, N.I., Hall, P., 1991. Bootstrap algorithms for small samples. J. Stat. Plan. Inference 27, 157–169. https://doi.org/10.1016/0378-3758(91)90013-5.

Fraimout, A., Jacquemart, P., Villarroel, B., Aponte, D.J., Decamps, T., Herrel, A., Cornette, R., Debat, V., 2018. Phenotypic plasticity of Drosophila suzukii wing to developmental temperature: implications for flight. J. Exp. Biol. 221. https://doi.org/10.1242/jeb.166868.

Gilioli, G., Pasquali, S., 2007. Use of individual-based models for population parameters estimation. Ecol. Modell. 200, 109–118. https://doi.org/10.1016/j.ecolmodel.2006.07.017.

Grassi, A., Giongo, L., Palmieri, L., Giongo, L., Palmieri, L., 2011. Drosophila (Sophophora) suzukii (Matsumura) (Diptera: drosophilidae), new pest of soft fruits in Trentino (North-Italy) and in Europe. IOBC/wprs Bull. 70, 121–128.

Greenman, C.D., Chou, T., 2016. Kinetic theory of age-structured stochastic birth-death processes. Phys. Rev. E 93, 012112. https://doi.org/10.1103/PhysRevE.93.012112.

Gutierrez, A.P., Baumgärtner, J., 1984. Multitrophic models of predator-prey energetics: II. A realistic model of plant-herbivore-parasitoid-predator interactions. Can. Entomol. 116, 933–949. https://doi.org/10.4039/Ent116933-7.

Hauser, M., 2011. A historic account of the invasion of Drosophila suzukii (Matsumura) (Diptera: drosophilidae) in the continental United States, with remarks on their identification. Pest Manag. Sci. 67, 1352–1357. https://doi.org/10.1002/ps.2265.

Huang, M., Tang, M., Yu, J., Zheng, B., 2020. School of statistics and mathematics, Guangdong university of finance and economics, Guangzhou 510320, China, Department of mathematics, Michigan state university, East Lansing, MI 48824, USA, center for applied mathematics, college of mathematics and information sciences, Guangzhou University, Guangzhou 510006, China. A Stage Structured Model of Delay Differential Equations For Aedes mosquito Population Suppression. Discrete & Continuous Dynamical Systems - A 40, pp. 3467–3484. https://doi.org/10.3934/dcds.2020042.

Jakeman, A.J., Elsawah, S., Wang, H.H., Hamilton, S.H., Melsen, L., Grimm, V., 2024. Towards normalizing good practice across the whole modeling cycle: its instrumentation and future research topics. SESMO 6, 18755. https://doi.org/10.18174/sesmo.18755.

Johnson, C.G., 1950. The comparison of suction trap, sticky trap and tow-net for the quantitative sampling of small airborne insects. Ann. Appl. Biol. 37, 268–285. https://doi.org/10.1111/j.1744-7348.1950.tb01045.x.

Kinjo, H., Kunimi, Y., Nakai, M., 2014. Effects of temperature on the reproduction and development of Drosophila suzukii (Diptera: drosophilidae). Appl. Entomol. Zool. 49, 297–304. https://doi.org/10.1007/s13355-014-0249-z.

Knight, J.D., Mumford, J.D., 1994. Decision support systems in crop protection. Outlook. Agric. 23, 281–285. https://doi.org/10.1177/003072709402300408.

Lactin, D.J., Holliday, N.J., Johnson, D.L., Craigen, R., 1995. Improved rate model of temperature-dependent development by arthropods. Env. Entomol. 24, 68–75. https://doi.org/10.1093/ee/24.1.68.

Logan, J.A., Wollkind, D.J., Hoyt, S.C., Tanigoshi, L.K., 1976. An analytic model for description of temperature dependent rate phenomena in arthropods. Env. Entomol. 5, 1133–1140. https://doi.org/10.1093/ee/5.6.1133.

Lou, Y., Liu, K., He, D., Gao, D., Ruan, S., 2019. Modelling diapause in mosquito population growth. J. Math. Biol. 78, 2259–2288. https://doi.org/10.1007/s00285-019-01343-6.

Manetsch, T.J., 1976. Time-varying distributed delays and their use in aggregative models of large systems. IEEE Trans. Syst. Man Cybern. SMC-6 547–553. https://doi.org/10.1109/TSMC.1976.4309549.

Moshtaghi Maleki, F., Iranipour, S., Hejazi, M.J., Saber, M., 2016. Temperature-dependent age-specific demography of grapevine moth (Lobesia botrana) (Lepidoptera: tortricidae): jackknife vs. bootstrap techniques. Archives of. Phytopathol. Plant Prot. 49, 263–280. https://doi.org/10.1080/03235408.2016.1140566.

Ndjomatchoua, F.T., Guimapi, R.A.Y., Rossini, L., Djouda, B.S., Pedro, S.A., 2024. A generalized risk assessment index for forecasting insect population under the effect of temperature. J. Therm. Biol. 122, 103886. https://doi.org/10.1016/j.jtherbio.2024.103886.

Ndjomatchoua, F.T., Stutt, R., Olaf, J., Hamilton Guimapi, R.A., Rossini, L., Gilligan, C. A., 2025. Integration of temperature-driven population model and pest monitoring data to estimate initial conditions and timing of first field invasion: application to the cassava whitefly, Bemisia tabaci. J. R. Soc. Interface 22, 20250059. https://doi.org/10.1098/rsif.2025.0059.

Neverova, G.P., Yarovenko, I.P., Frisman, E.Y., 2016. Dynamics of populations with delayed density dependent birth rate regulation. Ecol. Modell. 340, 64–73. https://doi.org/10.1016/j.ecolmodel.2016.09.005.

Ngwa, G.A., Teboh-Ewungkem, M.I., Dumont, Y., Ouifki, R., Banasiak, J., 2019. On a three-stage structured model for the dynamics of malaria transmission with human treatment, adult vector demographics and one aquatic stage. J. Theor. Biol. 481, 202–222. https://doi.org/10.1016/j.jtbi.2018.12.043.

Onufrieva, K.S., Onufriev, A.V., 2021. How to count bugs: a method to estimate the most probable absolute population density and its statistical bounds from a single trap catch. Insects 12, 932. https://doi.org/10.3390/insects12100932.

Otero, M., Solari, H.G., Schweigmann, N., 2006. A stochastic population dynamics model for Aedes aegypti: formulation and application to a city with temperate climate. Bull. Math. Biol. 68, 1945–1974. https://doi.org/10.1007/s11538-006-9067-y.

Pasquali, S., Soresina, C., Gilioli, G., 2019. The effects of fecundity, mortality and distribution of the initial condition in phenological models. Ecol. Modell. 402, 45–58. https://doi.org/10.1016/j.ecolmodel.2019.03.019.

Quinn, B.K., 2017. A critical review of the use and performance of different function types for modeling temperature-dependent development of arthropod larvae. J. Therm. Biol. 63, 65–77. https://doi.org/10.1016/j.jtherbio.2016.11.013.

Ratkowsky, D.A., Reddy, G.V.P., 2017. Empirical model with excellent statistical properties for describing temperature-dependent developmental rates of insects and mites. Ann. Entomol. Soc. Am. 110, 302–309. https://doi.org/10.1093/aesa/saw098.

Rossini, L., Bono Rosselló, N., Benhamouche, O., Contarini, M., Speranza, S., Garone, E., 2025a. A general DDE framework to describe insect populations: why delays are so important? Ecol. Modell. 499, 110937. https://doi.org/10.1016/j.ecolmodel.2024.110937.

Rossini, L., Bono Rosselló, N., Contarini, M., Speranza, S., Garone, E., 2022aa. Modelling ectotherms' populations considering physiological age structure and spatial motion: a novel approach. Ecol. Inf. 70, 101703. https://doi.org/10.1016/j.ecoinf.2022.101703.

Rossini, L., Bono Rosselló, N., Speranza, S., Garone, E., 2021. A general ODE-based model to describe the physiological age structure of ectotherms: description and application to Drosophila suzukii. Ecol. Modell. 456, 109673. https://doi.org/10.1016/j.ecolmodel.2021.109673.

Rossini, L., Bruzzone, O.A., 2025. A novel PDE model to describe terrestrial arthropods considering physiological age, reproduction rate, and body mass. Acta IMEKO 14, 1–11. https://doi.org/10.21014/actaimeko.v14i1.1873.

Rossini, L., Bruzzone, O.A., Contarini, M., Bufacchi, L., Speranza, S., 2022b. A physiologically based ODE model for an old pest: modeling life cycle and population dynamics of bactrocera oleae (Rossi). Agronomy 12, 2298. https://doi.org/10.3390/agronomy12102298.

Rossini, L., Contarini, M., Bono Rosselló, N., Garone, E., Speranza, S., 2023. Prediction of infestations by true bugs in hazelnut orchards: feasibility and preliminary approaches in the case of halyomorpha halys. Acta Hortic. 463–472. https://doi.org/10.17660/ActaHortic.2023.1379.66.

Rossini, L., Contarini, M., Bono-Rosselló, N., Garone, E., Speranza, S., 2026. Closing the loop: tandem between monitoring and modelling to predict bactrocera oleae infestations. Acta Hortic. 265–274. https://doi.org/10.17660/ActaHortic.2026.1446.36.

Rossini, L., Contarini, M., Delfino, I., Speranza, S., 2025b Does insect trapping truly measure insect populations? Agri and Forest Entomology afe.12681. https://doi.org/10.1111/afe.12681.

Rossini, L., Contarini, M., Giarruzzo, F., Assennato, M., Speranza, S., 2020a. Modelling drosophila Suzukii adult male populations: a physiologically based approach with validation. Insects 11, 751. https://doi.org/10.3390/insects11110751.

Rossini, L., Contarini, M., Severini, M., Speranza, S., 2020b. Reformulation of the distributed delay model to describe insect pest populations using count variables. Ecol. Modell. 436, 109286. https://doi.org/10.1016/j.ecolmodel.2020.109286.

Rossini, L., Contarini, M., Speranza, S., 2021b. A novel version of the Von Foerster equation to describe poikilothermic organisms including physiological age and reproduction rate. Ric. Mat. 70, 489–503. https://doi.org/10.1007/s11587-020-00489-6.

Rossini, L., Contarini, M., Speranza, S., Mermer, S., Walton, V., Francis, F., Garone, E., 2024. Life tables in entomology: a discussion on tables' parameters and the importance of raw data. PLoS. One 19, e0299598. https://doi.org/10.1371/journal.pone.0299598.

Rossini, L., Lots, A., Noël, G., Segers, A., Mermer, S., Contarini, M., Speranza, S., Walton, V., Francis, F., Garone, E., 2025c. Life tables data collection in entomology: an overview on the differential and the integral representation and proposal for a standard electronic file. Insect Sci. 0, 1–18. https://doi.org/10.1111/1744-7917.70040.

Rossini, L., Severini, M., Contarini, M., Speranza, S., 2020c. EntoSim, a ROOT-based simulator to forecast insects' life cycle: description and application in the case of Lobesia botrana. Crop. Prot. 129, 105024. https://doi.org/10.1016/j.cropro.2019.105024.

Rossini, L., Severini, M., Contarini, M., Speranza, S., 2019a. A novel modelling approach to describe an insect life cycle vis-à-vis plant protection: description and application in the case study of Tuta absoluta. Ecol. Modell. 409, 108778. https://doi.org/10.1016/j.ecolmodel.2019.108778.

Rossini, L., Severini, M., Contarini, M., Speranza, S., 2019b. Use of ROOT to build a software optimized for parameter estimation and simulations with distributed Delay Model. Ecol. Inf. 50, 184–190. https://doi.org/10.1016/j.ecoinf.2019.02.002.

Ryan, G.D., Emiljanowicz, L., Wilkinson, F., Kornya, M., Newman, J.A., 2016. Thermal tolerances of the spotted-wing drosophila Drosophila suzukii (Diptera: drosophilidae). J. Econ. Entomol. 109, 746–752. https://doi.org/10.1093/jee/tow006.

Sadovski, A., 2020. Precision agriculture through agroecological approach and mathematical modeling. Ecol. Eng. Environ. Prot. 63–69. https://doi.org/10.32006/eeep.2020.2.6369.

Schoolfield, R.M., Sharpe, P.J.H., Magnuson, C.E., 1981. Non-linear regression of biological temperature-dependent rate models based on absolute reaction-rate theory. J. Theor. Biol. 88, 719–731. https://doi.org/10.1016/0022-5193(81)90246-0.

Severini, M., Baumgärtner, J., Limonta, L., 2003. Parameter estimation for distributed delay based population models from laboratory data: egg hatching of Oulema duftschmidi Redthenbacher (Coleoptera, Chrysomelidae) as an example. Ecol. Modell. 167, 233–246. https://doi.org/10.1016/S0304-3800(03)00188-1.

Severini, M., Baumgärtner, J., Ricci, M., 1990. Theory and practice of parameter estimation of distributed delay models for insect and plant phenologies. Meteorol. Environ. Sci. 674–719.

Sharpe, P.J.H., DeMichele, D.W., 1977. Reaction kinetics of poikilotherm development. J. Theor. Biol. 64, 649–670. https://doi.org/10.1016/0022-5193(77)90265-X.

Sondgerath, D., Richter, O., 1990. An extension of the Leslie matrix model for describing population dynamics of species with several development stages. Biometrics 46, 595. https://doi.org/10.2307/2532081.

Tochen, S., Dalton, D.T., Wiman, N., Hamm, C., Shearer, P.W., Walton, V.M., 2014. Temperature-related development and population parameters for Drosophila suzukii (Diptera: drosophilidae) on cherry and blueberry. Env. Entomol. 43, 501–510. https://doi.org/10.1603/EN13200.

Turchin, P., 1990. Rarity of density dependence or population regulation with lags? Nature 344, 660–663. https://doi.org/10.1038/344660a0.

Van Timmeren, S., Diepenbrock, L.M., Bertone, M.A., Burrack, H.J., Isaacs, R., 2017. A filter method for improved monitoring of drosophila suzukii (Diptera: drosophilidae) larvae in fruit. J. Integr. Pest. Manage 8, 23. https://doi.org/10.1093/jipm/pmx019.

Vansickle, J., 1977. Attrition in distributed delay models. IEEE Trans. Syst. Man Cybern. 7, 635–638. https://doi.org/10.1109/TSMC.1977.4309800.

Walsh, D.B., Bolda, M.P., Goodhue, R.E., Dreves, A.J., Lee, J., Bruck, D.J., Walton, V.M., O'Neal, S.D., Zalom, F.G., 2011. Drosophila suzukii (Diptera: drosophilidae): invasive pest of ripening soft fruit expanding its geographic range and damage potential. J. Integr. Pest. Manage 2, G1–G7. https://doi.org/10.1603/IPM10010.

Wang, K.S., Hsu, F.S., Liu, P.P., 2002. Modeling the bathtub shape hazard rate function in terms of reliability. Reliab. Eng. Syst. Saf. 75, 397–406. https://doi.org/10.1016/S0951-8320(01)00124-7.

Williams, D.W., Liebhold, A.M., 1995. Detection of delayed density dependence: effects of autocorrelation in an exogenous factor. Ecology 76, 1005–1008. https://doi.org/10.2307/1939363.

Wiman, N.G., Walton, V.M., Dalton, D.T., Anfora, G., Burrack, H.J., Chiu, J.C., Daane, K. M., Grassi, A., Miller, B., Tochen, S., Wang, X., Ioriatti, C., 2014. Integrating temperature-dependent life table data into a matrix projection model for Drosophila suzukii population estimation. PLoS. One 9, e106909. https://doi.org/10.1371/journal.pone.0106909.

Winkler, A., Jung, J., Kleinhenz, B., Racca, P., 2021. Estimating temperature effects on Drosophila suzukii life cycle parameters. Agric. For. Entomol. Afe. 12438. https://doi.org/10.1111/afe.12438.

Zhai, Z., Martínez, J.F., Beltran, V., Martínez, N.L., 2020. Decision support systems for agriculture 4.0: survey and challenges. Comput. Electron. Agric. 170, 105256. https://doi.org/10.1016/j.compag.2020.105256.

Zhang, G., Xiao, A., 2016. Exact and numerical stability analysis of reaction-diffusion equations with distributed delays. Front. Math. China 11, 189–205. https://doi.org/10.1007/s11464-015-0506-7.

Zhang, Y., Zhao, X.Q., 2013. Spatial dynamics of A reaction-diffusion model with distributed delay. Math. Model. Nat. Phenom. 8, 60–77. https://doi.org/10.1051/mmnp/20138306.